Model	E3S21AJE23	E3S22AJE23	E3S23AJE23	E3S24AJE23	E3S25AJE21	E3S26AJE24	E3S27AJE25	E3S28AJE07	E3S29AJE02	E3S2AAJE02	E3S2BAJE03
Size	1/4 NPT	3/8 NPT	1/2 NPT	3/4 NPT	1 NPT	1 1/4 NPT	1 1/2 NPT	2 NPT	2 1/2 NPT	3 NPT	4 NPT
Temp	-4° / 392°F	-4° / 392°F	-4° / 392°F	-4° / 392°F	-4° / 392°F	-4° / 392°F	-4° / 392°F	-4° / 392°F	-4° / 392°F	-4° / 392°F	-4° / 392°F
WOG	1000 psi	1000 psi	1000 psi	1000 psi	1000 psi	1000 psi	1000 psi	1000 psi	1000 psi	1000 psi	1000 psi
A	2.17	2.36	2.95	3.15	3.54	4.33	4.72	5.51	7.28	8.07	9.45
B	0.31	0.39	0.59	0.79	0.98	1.26	1.50	1.97	2.56	2.99	3.94
C	1.59	1.59	1.59	1.77	1.87	2.19	2.57	2.87	4.13	4.39	5.35
D	6.77	6.77	6.77	6.95	7.05	7.37	7.75	10.60	14.17	14.43	17.75
E	4.24	4.24	4.24	4.24	4.24	4.24	4.24	4.49	7.87	7.87	11.81
F	5.66	5.66	5.66	5.66	5.66	5.66	5.66	---	---	---	---
G	5.18	5.18	5.18	5.18	5.18	5.18	5.18	7.73	10.04	10.04	12.40
H	---	---	---	---	---	---	---	---	13.00	13.00	14.96
Actuator	DE156	DE156	DE156	DE156	DE154	DE304	DE305	MA4	MA13	MA13	MA35
Wt. lbs	5.30	5.30	5.30	5.80	6.60	7.70	10.40	15.21	43.60	50.40	74.00
Sized for Max. △ PSI	500 psi	500 psi	500 psi	500 psi	500 psi	300 psi	300 psi	300 psi	300 psi	300 psi	300 psi

Model No. Voltage Code:
E3S2XAJEXX**Y**

Code (Suffix)
Blank = 115VAC
B = 240VAC
H = 12-24 VAC/VDC (DE)

3.00 Above Shaft
Minimum Distance
For Cover Removal

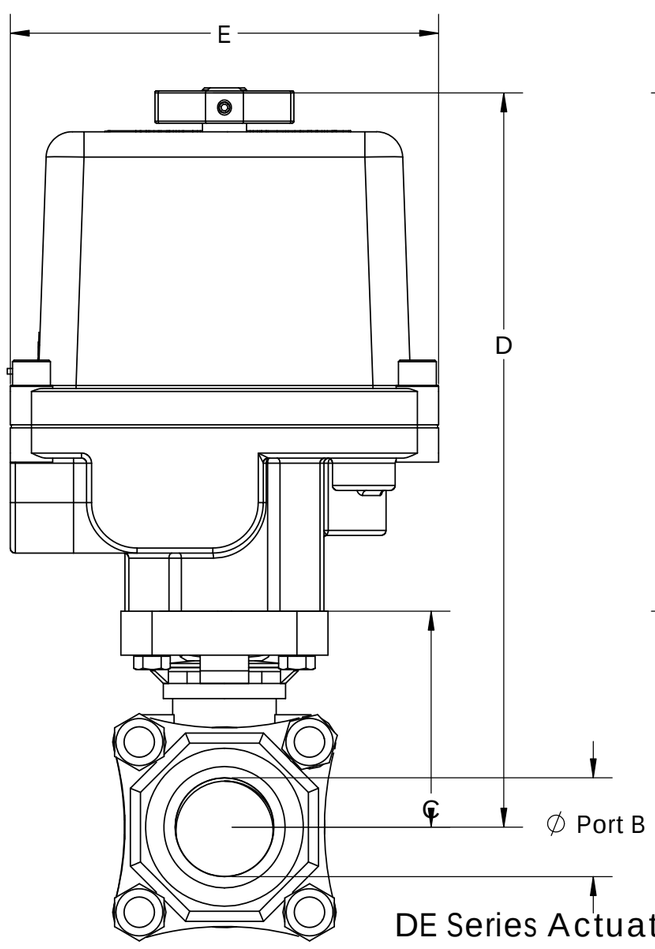

DE Series Actuator

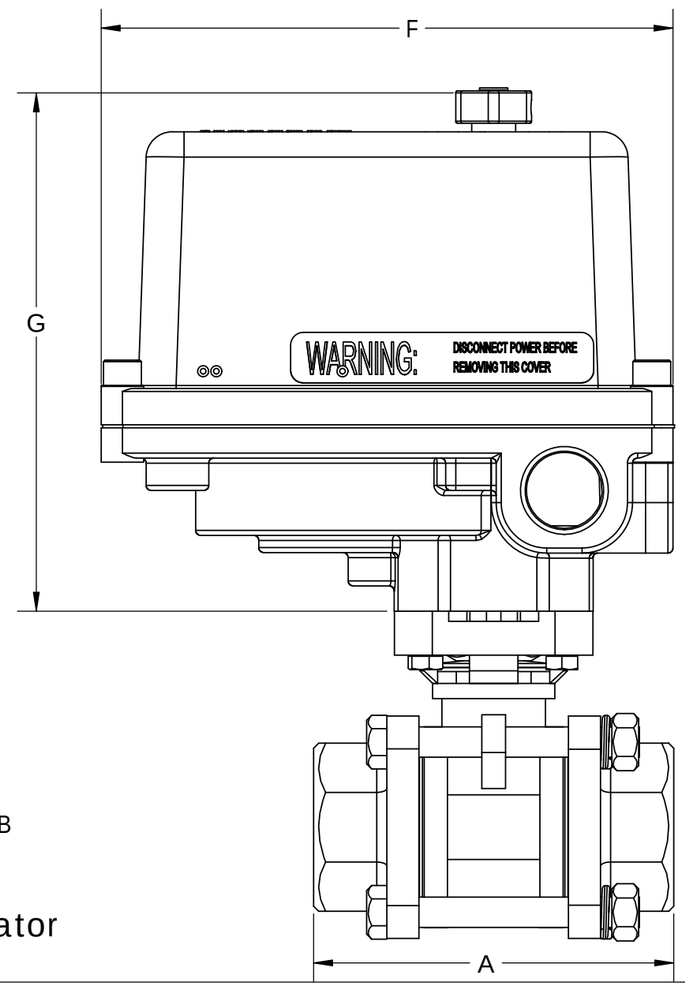

MA Series Actuator

6.25 Above Shaft
Minimum Distance
For Cover Removal

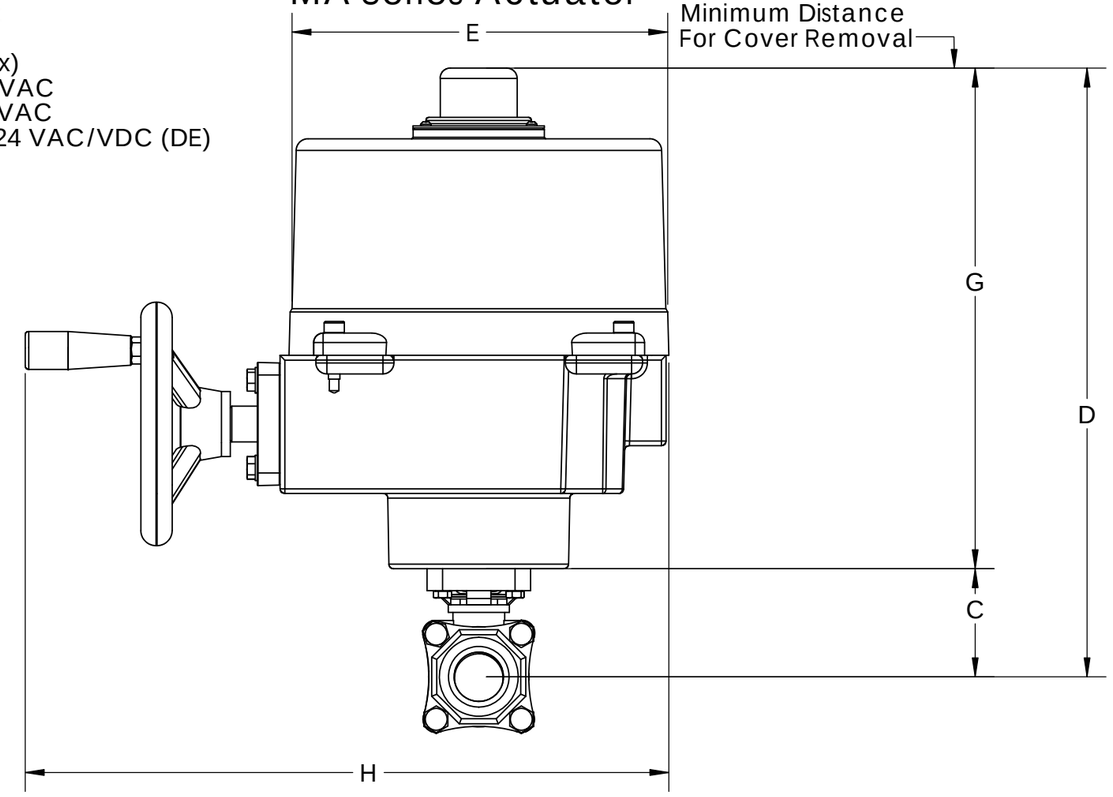

UNCONTROLLED DRAWING

THIS PRINT IS THE PROPERTY OF DYNAQUIP CONTROLS AND SHALL NOT BE COPIED, REPRODUCED,LOANED, OR DISPOSED OF DIRECTLY OR INDIRECTLY, NOR USED FOR ANY PURPOSE OTHER THAN THAT FOR WHICH IT IS SPECIFICALLY FURNISHED EXCEPT BY WRITTEN PERMISSION OF DYNAQUIP CONTROLS.

NO. E3 Series

FILE NO. Sub306

TITLE

Ball Valve SS
Full Port - NPT
Electric Actuator

DR	DATE	CH'KD	DATE	ENGR	DATE
MJP	01-27-16	MWS	11-17-15	MWS	11-17-15

DynaQuip Controls