Double Acting	Spring Return	A	B	C	D	E	F	G	H	P	N	J	K	L	M
SP052DA	SP052SR()	5.75	2.83	1.18	3.62	1.85	1.26	.55	3.15	1.18	.43	1.97	1.42	M6X10	M5x7.5
SP063DA	SP063SR()	6.81	3.46	1.42	4.25	2.13	1.50	.71	3.15	1.18	.55	2.76	1.97	M8x13	M6x10
SP083DA	SP083SR()	8.03	4.25	1.89	5.04	2.58	1.89	.83	3.15	1.18	.67	2.76	1.97	M8x13	M6x10
SP105DA	SP105SR()	10.63	5.24	1.97	6.02	3.03	2.36	1.02	3.15	1.18	.87	4.02	2.76	M10x16	M8x13
SP125DA	SP125SR()	11.89	6.10	2.28	6.89	3.43	2.74	1.08	3.15	1.18	.87	4.02	2.76	M10x16	M8x13
SP140DA	SP140SR()	15.51	6.77	2.72	7.56	3.76	3.03	1.26	3.15	1.18	1.06	4.92	4.02	M12x20	M10x16
SP160DA	SP160SR()	17.95	7.80	2.95	8.58	4.17	3.43	1.34	3.15	1.18	1.06	4.92	4.02	M12x20	M10x16

"DA" Torque Ratings lbs.-in.		
ACTUATOR SIZE	AIR IN P.S.I.G.	
	60	80
SP052DA	141	194
SP063DA	229	352
SP083DA	504	694
SP105DA	1153	1590
SP125DA	2045	2812
SP140DA	3077	4231
SP160DA	4687	6445

"SR" Torque Ratings -- lbs.-in.							
Actuator Size	NO. Of Spg	Air Supply In psig				Spring Stroke	
		60		80			
		Start	End	Start	End	Start	End
SP052SR()	10 12	72 -	32 -	125 111	85 63	110 132	70 84
SP063SR()	10 12	135 -	71 -	231 207	167 131	185 221	121 145
SP083SR()	10 12	243 -	141 -	433 381	330 258	364 436	261 313
SP105SR()	10 12	591 -	281 -	1024 912	709 539	872 1047	562 674
SP125SR()	10 12	1115 -	522 -	1885 1699	1283 982	1527 1832	929 1115
SP140SR()	10 12	1549 -	788 -	2704 2403	1942 1562	2283 2740	1522 1827
SP160SR()	10 12	2213 -	1275 -	3974 3478	3036 2354	3408 4089	2469 2963

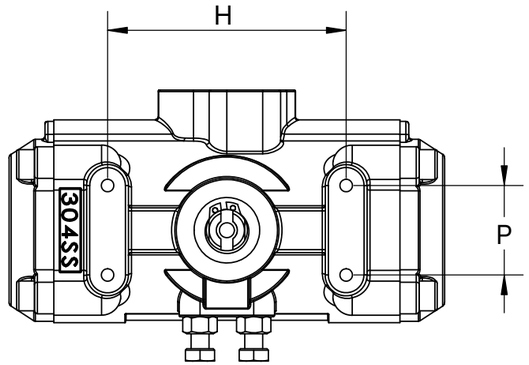

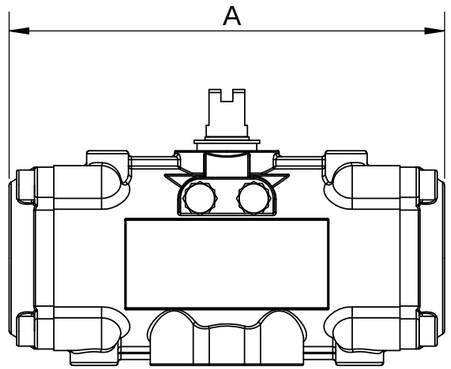

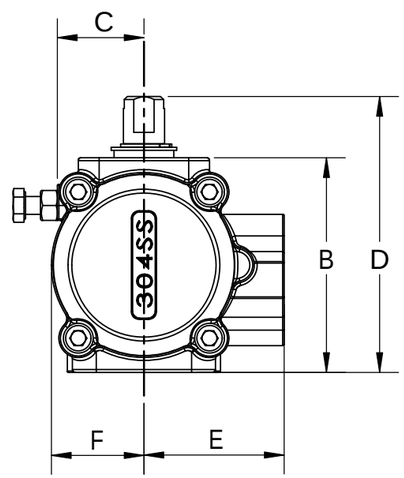

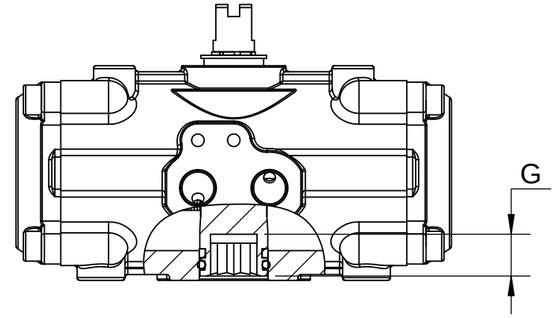

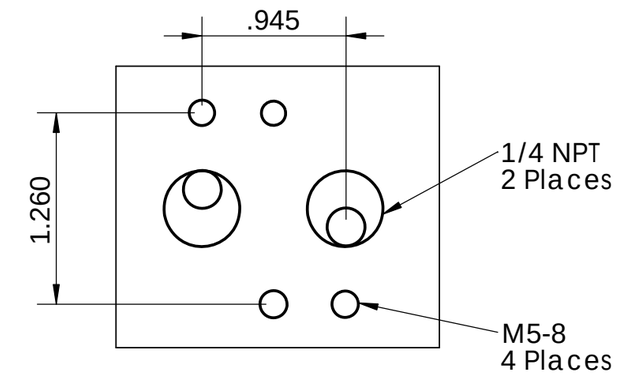

Port Connections

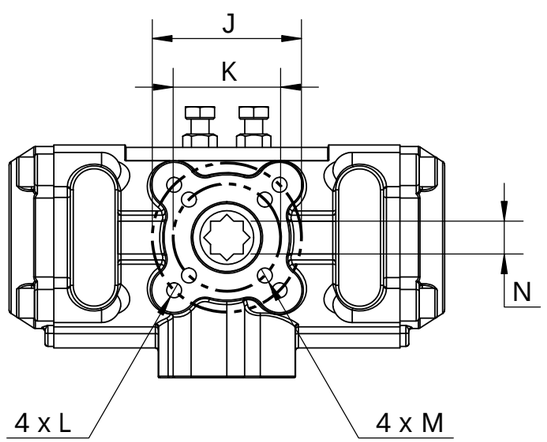

UNCONTROLLED DRAWING

THIS PRINT IS THE PROPERTY OF DYNAQUIP CONTROLS AND SHALL NOT BE COPIED, REPRODUCED,LOANED, OR DISPOSED OF DIRECTLY OR INDIRECTLY, NOR USED FOR ANY PURPOSE OTHER THAN THAT FOR WHICH IT IS SPECIFICALLY FURNISHED EXCEPT BY WRITTEN PERMISSION OF DYNAQUIP CONTROLS.

NO. SP - Actuator

FILE NO. SUB401

TITLE

Pneumatic Actuator

SP Series

DR	DATE	CH'KD	DATE	ENGR	DATE
CMM	09-28-17	CMM	09-28-17	CMM	09-28-17

DynaQuip ®

CONTROLS CORPORATION