Model	PAS21ARDA052	PAS22ARDA052	PAS23ARDA052	PAS24ARDA052	PAS25ARDA063	PAS26ARDA075	PAS27ARDA083	PAS38ARDA083
Size	1/4 NPT	3/8 NPT	1/2 NPT	3/4 NPT	1 NPT	1 1/4 NPT	1 1/2 NPT	2 NPT
Cv	5.3	8	19	35	50	110	180	210
WOG	3000 psi	3000 psi	3000 psi	3000 psi	3000 psi	3000 psi	3000 psi	3000 psi
A	2.95	2.95	2.95	3.19	3.58	4.33	4.76	5.71
B	0.38	.38	.50	.69	.87	1.14	1.37	1.37
C	1.61	1.61	1.61	1.72	2.11	2.32	2.96	2.96
D	4.17	4.17	4.17	4.28	6.36	7.04	8.04	8.04
E	1.86	1.86	1.86	1.86	3.19	3.70	3.88	3.88
F	4.49	4.49	4.49	4.49	7.48	8.15	8.39	8.39
G	2.56	2.56	2.56	2.56	4.25	4.72	5.08	5.08
MAX Dif PSI	1500	1500	1500	1500	1500	1500	1500	1500
Actuator	HP052DA	HP052DA	HP052DA	HP052DA	HP063DA	HP075DA	HP083DA	HP083DA
Ambient Temp	-4° / 176°F	-4° / 176°F	-4° / 176°F	-4° / 176°F	-4° / 176°F	-4° / 176°F	-4° / 176°F	-4° / 176°F
Media Temp	-20° / 185°F	-20° / 185°F	-20° / 185°F	-20° / 185°F	-20° / 185°F	-20° / 185°F	-20° / 185°F	-20° / 185°F
Wt. lbs	3.61	3.61	3.61	4.20	6.61	10.51	14.90	17.30

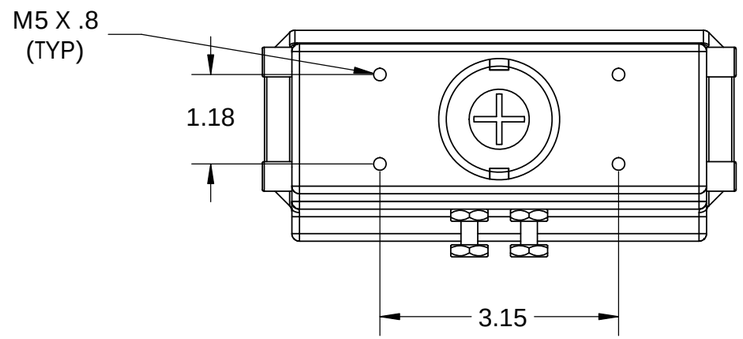

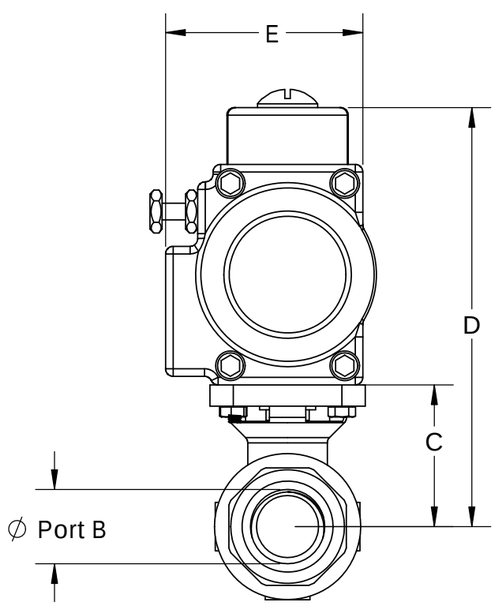

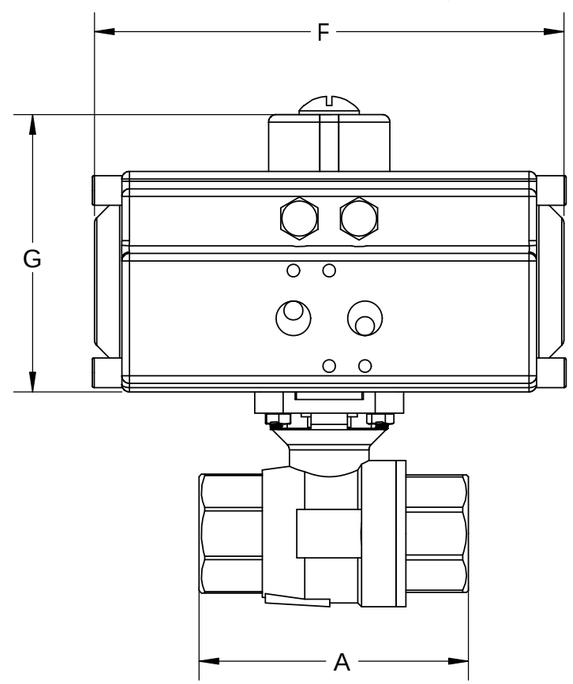

FOR APPLICATIONS EXCEEDING LISTED TEMPERATURES, CALL TO DISCUSS OPTIONS

MODEL NUMBERS LISTED ABOVE INDICATE SS BALL VALVES - PAS...

FOR CARBON STEEL BALL VALVES, MODEL NUMBERS START - PAC...

UNCONTROLLED DRAWING

THIS PRINT IS THE PROPERTY OF DYNAQUIP CONTROLS AND SHALL NOT BE COPIED, REPRODUCED,LOANED, OR DISPOSED OF DIRECTLY OR INDIRECTLY, NOR USED FOR ANY PURPOSE OTHER THAN THAT FOR WHICH IT IS SPECIFICALLY FURNISHED EXCEPT BY WRITTEN PERMISSION OF DYNAQUIP CONTROLS.

NO. PAS/PAC Series

FILE NO. Sub450

TITLE

Ball Valve
Full Port High Pressure - NPT
HP-DA Actuator

DR	DATE	CH'KD	DATE	ENGR	DATE
CMM	06-15-23				

DynaQuip Controls