Model	PAS21ARSR06412	PAS22ARSR06412	PAS23ARSR06412	PAS24ARSR07512	PAS25ARSR08312	PAS26ARSR09212	PAS27ARSR10512	PAS38ARSR10512
Size	1/4 NPT	3/8 NPT	1/2 NPT	3/4 NPT	1 NPT	1 1/4 NPT	1 1/2 NPT	2 NPT
Cv	5.3	8	19	35	50	110	180	210
WOG	3000 psi	3000 psi	3000 psi	3000 psi	3000 psi	3000 psi	3000 psi	3000 psi
A	2.95	2.95	2.95	3.19	3.58	4.33	4.76	5.71
B	0.38	.38	.50	.69	.87	1.14	1.37	1.37
C	1.61	1.61	1.61	1.72	2.11	2.32	2.96	2.96
D	5.86	5.86	5.86	6.44	7.19	6.57	8.98	8.98
E	3.19	3.19	3.19	3.70	3.88	3.19	4.78	4.78
F	7.48	7.48	7.48	8.15	8.39	7.48	11.30	11.30
G	4.25	4.25	4.25	4.72	5.08	4.25	6.02	6.02
MAX Dif PSI	1500	1500	1500	1500	1500	1500	1500	1500
Actuator	HP064SR12	HP064SR12	HP064SR12	HP075SR12	HP083SR12	HP092SR12	HP105SR12	HP105SR12
Ambient Temp	-4° / 176°F	-4° / 176°F	-4° / 176°F	-4° / 176°F	-4° / 176°F	-4° / 176°F	-4° / 176°F	-4° / 176°F
Media Temp	-20° / 185°F	-20° / 185°F	-20° / 185°F	-20° / 185°F	-20° / 185°F	-20° / 185°F	-20° / 185°F	-20° / 185°F
Wt. lbs	4.60	4.60	4.70	5.50	8.90	15.60	22.40	24.80

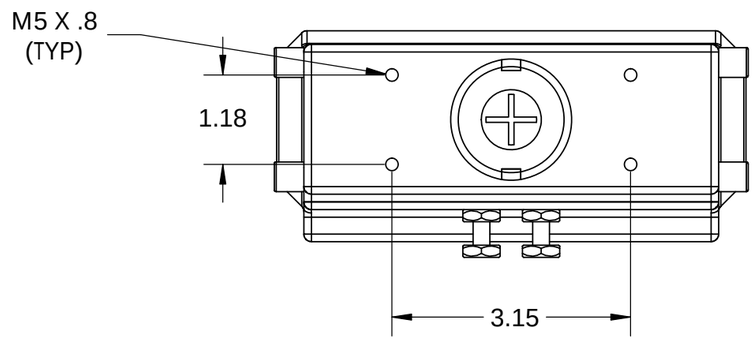

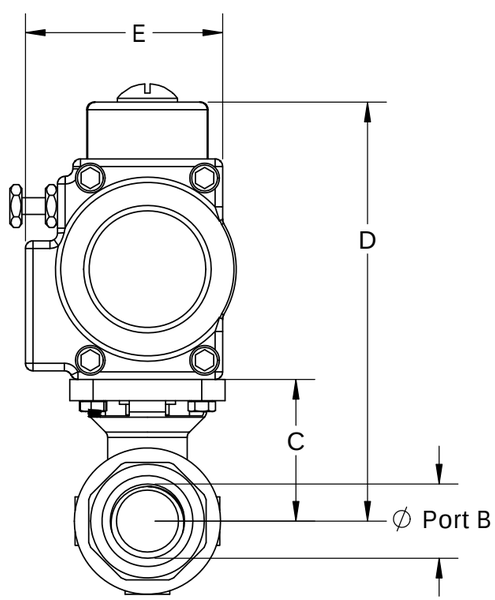

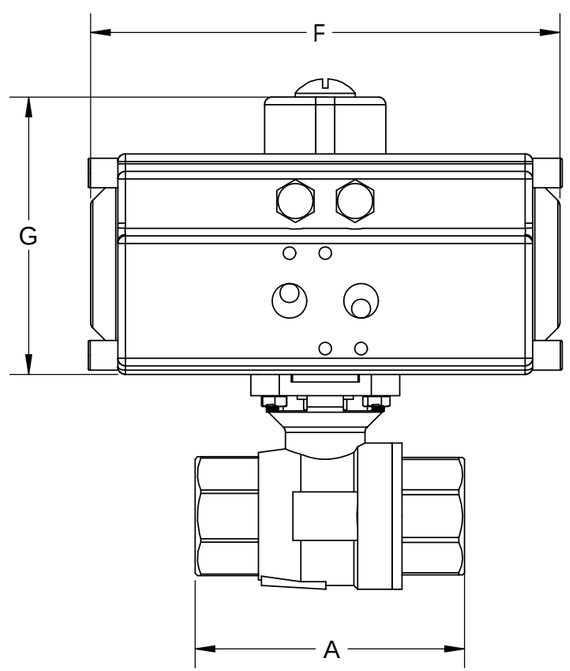

FOR APPLICATIONS EXCEEDING LISTED TEMPERATURES, CALL TO DISCUSS OPTIONS

MODEL NUMBERS LISTED ABOVE INDI CATE SS BALL VALVES - PAS...

FOR CARBON STEEL BALL VALVES, MODEL NUMBERS START - PAC

UNCONTROLLED DRAWING

THIS PRINT IS THE PROPERTY OF DYNAQUIP CONTROLS AND SHALL NOT BE COPIED, REPRODUCED,LOANED, OR DISPOSED OF DIRECTLY OR INDIRECTLY, NOR USED FOR ANY PURPOSE OTHER THAN THAT FOR WHICH IT IS SPECIFICALLY FURNISHED EXCEPT BY WRITTEN PERMISSION OF DYNAQUIP CONTROLS.

NO. PAS/PAC Series

FILE NO. Sub451

TITLE

Ball Valve
Full Port High Pressure- NPT
HP-SR NC Actuator

DR	DATE	CH'KD	DATE	ENGR	DATE
CMM	06-15-23				

DynaQuip Controls