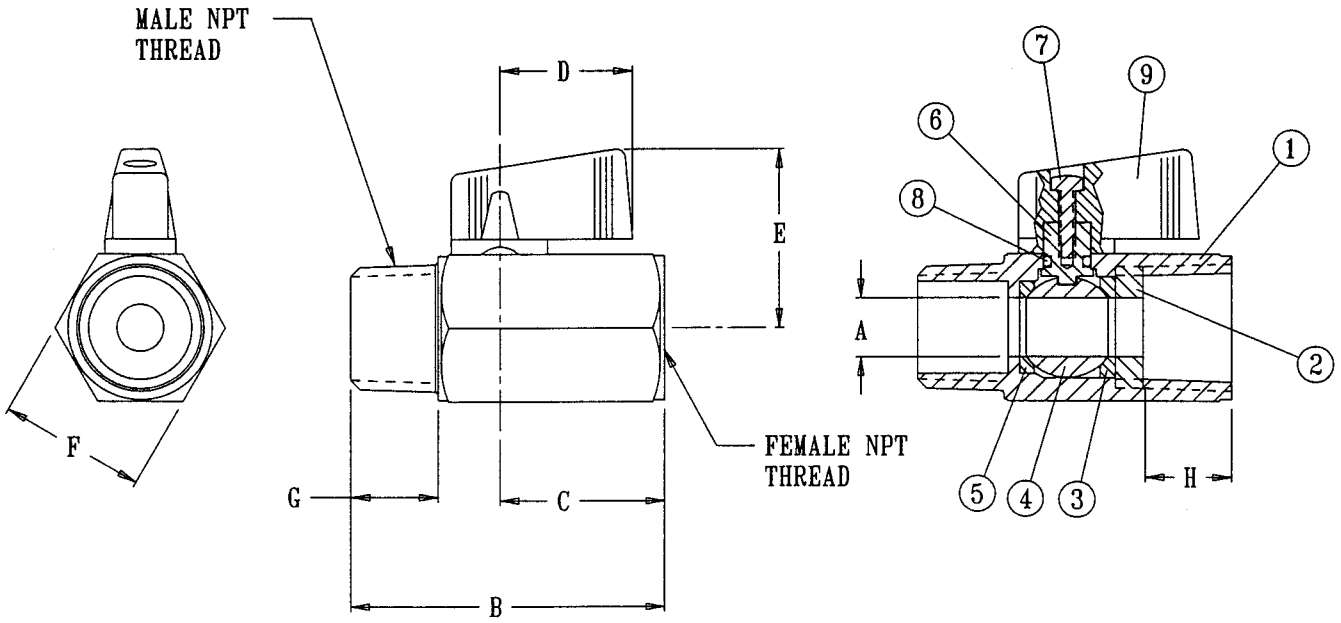

ITEM NO.	PART NAME	MATERIAL
1	CHROME PLATED BODY	BRASS
2	RETAINER NUT	BRASS
3	RETAINER SEAT	PTFE
4	CHROME PLATED BALL	BRASS
5	BODY SEAT	PTFE
6	STEM	BRASS
7	NICKEL PLATED SCREW	STEEL
8	O-RING STEM SEAL	VITON
9	BLACK HANDLE	NYLON

PART NO.	DIMENSIONS								NPT THREAD	PRESS. RATING	WT. LBS
	A	B	C	D	E	F	G	H			
VNH3-PM 1/4	.314	1.71	.91	.89	1.12	.826	.47	.47	1/4-18	450 CWP	.18
VNH3-PM 3/8	.314	1.71	.91	.89	1.12	.826	.47	.47	3/8-18	450 CWP	.18
VNH3-PM 1/2	.393	2.11	1.10	.89	1.20	.984	.61	.61	1/2-14	450 CWP	.30

UNCONTROLLED DRAWING

THIS PRINT IS THE PROPERTY OF DYNAQUIP CONTROLS AND SHALL NOT BE COPIED, REPRODUCED, LOANED, OR DISPOSED OF DIRECTLY OR INDIRECTLY, NOR USED FOR ANY PURPOSE OTHER THAN THAT FOR WHICH IT IS SPECIFICALLY FURNISHED EXCEPT BY WRITTEN PERMISSION OF DYNAQUIP CONTROLS.

NO. VNH3-PM

FILE NO. SUB002

TITLE

MINI BALL VALVE
BRASS MALE X FEMALE

DR	DATE	CH'KD	DATE	ENGR	DATE
MJP	11-07-96	LJH	01-20-00	LJH	01-20-00

DynaQuip Controls