MODEL	PCP23Z5UDA034	PCP24Z5UDA034	PCP25Z5UDA034	PCP26Z5UDA034	PCP27Z5UDA034	PCP28Z5UDA034	PCP29Z5UDA034	PCP2AZ5UDA034	PCP2BZ5UDA075
Size	1/2 NPT	3/4 NPT	1 NPT	1 1/4 NPT	1 1/2 NPT	2 NPT	2 1/2 NPT	3 NPT	4 NPT
WOG	230 PSI	230 PSI	230 PSI	230 PSI	230 PSI	230 PSI	145 PSI	145 PSI	145 PSI
A	3.32	3.73	4.72	5.66	6.20	7.09	8.60	10.42	12.10
B	.59	.77	.98	1.26	1.5	1.97	2.50	2.99	3.99
C	2.41	2.54	2.68	3.13	3.64	5.68	5.85	6.45	7.05
D	6.66	6.79	6.93	7.38	7.89	9.93	10.10	10.4	12.13
E	3.27	3.27	3.27	3.27	3.27	3.27	3.27	3.27	4.06
F	6.50	6.50	6.50	6.50	6.50	6.50	6.50	6.50	8.19
G	4.25	4.25	4.25	4.25	4.25	4.25	4.25	4.25	5.08
Actuator	UP034DA	UP034DA	UP034DA	UP034DA	UP034DA	UP034DA	UP034DA	UP034DA	UP075DA
Ambient Temp	33° / 113°F	33° / 113°F	33° / 113°F	33° / 113°F	33° / 113°F	33° / 113°F	33° / 113°F	33° / 113°F	33° / 113°F
Media Temp	33° / 113°F	33° / 113°F	33° / 113°F	33° / 113°F	33° / 113°F	33° / 113°F	33° / 113°F	33° / 113°F	33° / 113°F
WT. LBS.	5.03	5.13	5.39	5.9	6.54	7.66	11.15	14.59	22.27

VALVE DATA

Body/End Cap	PVC
Stem	PVC
Ball	PVC
Seats	EPDM
Stem Seal	PTFE

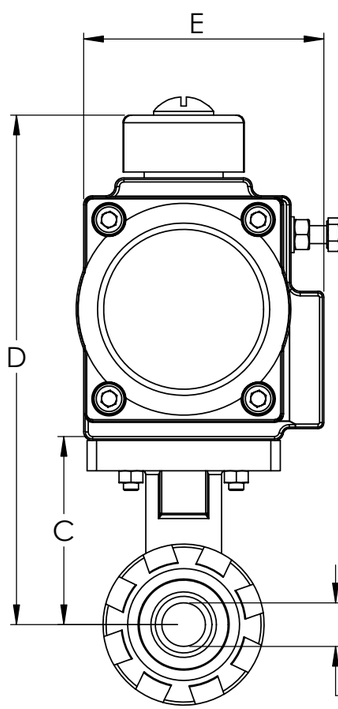

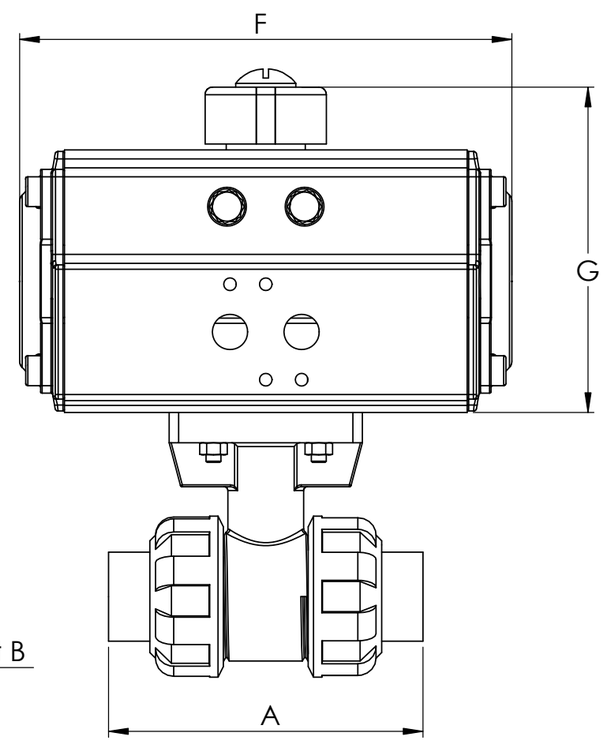

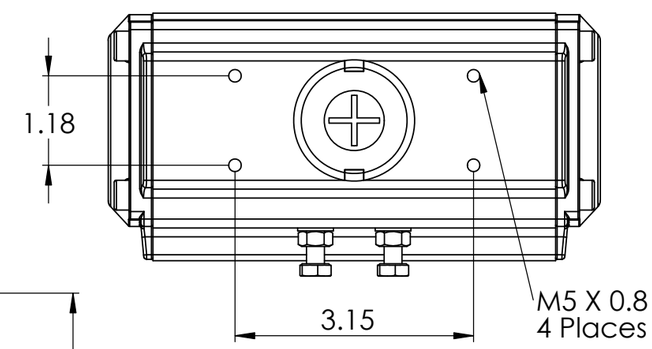

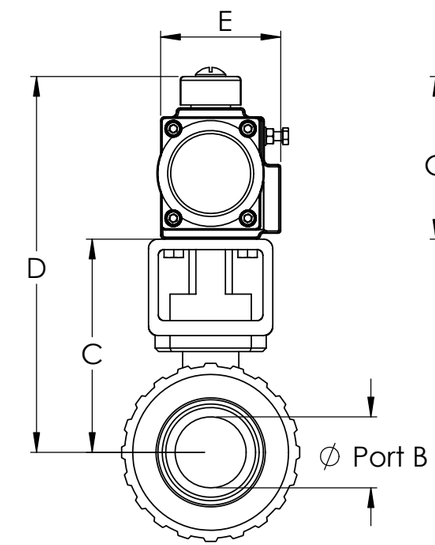

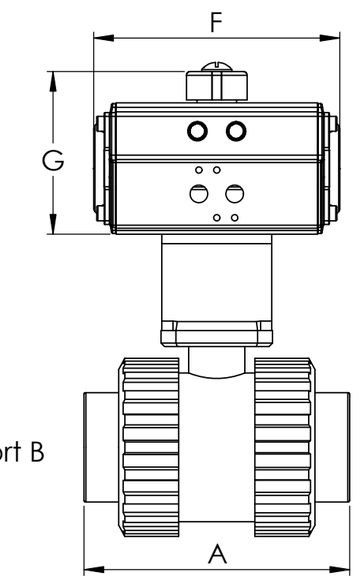

FOR 2-4" VALVES

UNCONTROLLED DRAWING

THIS PRINT IS THE PROPERTY OF DYNAQUIP CONTROLS AND SHALL NOT BE COPIED, REPRODUCED,LOANED, OR DISPOSED OF DIRECTLY OR INDIRECTLY, NOR USED FOR ANY PURPOSE OTHER THAN THAT FOR WHICH IT IS SPECIFICALLY FURNISHED EXCEPT BY WRITTEN PERMISSION OF DYNAQUIP CONTROLS.

NO. PCP SERIES

FILE NO. Sub548

TITLE

PVC VALVE
EPDM/PTFE FULL PORT
UP-DA ACTUATOR

DR	DATE	CH'KD	DATE	ENGR	DATE
MDC	08-26-24	MDC	08-26-24	MDC	08-26-24

DynaQuip®

CONTROLS CORPORATION