Model	P3S21AJSR05210F	P3S22AJSR05210F	P3S23AJSR05210F	P3S24AJSR05210F	P3S25AJSR06310F	P3S26AJSR06310F	P3S27AJSR07510F	P3S28AJSR09210F	P3S29AJSR12510F	P3S2AAJSR12510F	P3S2BAJSR12510F
Size	1/4 NPT	3/8 NPT	1/2 NPT	3/4 NPT	1 NPT	1 1/4 NPT	1 1/2 NPT	2 NPT	2 1/2 NPT	3 NPT	4 NPT
Cv	10	16	37	68	109	185	268	486	843	1150	2055
WOG	1000 psi	1000 psi	1000 psi	1000 psi	1000 psi	1000 psi	1000 psi	1000 psi	1000 psi	1000 psi	1000 psi
A	2.17	2.36	2.95	3.15	3.54	4.33	4.72	5.51	7.28	8.07	9.45
B	0.31	0.39	0.59	0.79	0.98	1.26	1.5	1.97	2.56	2.99	3.94
C	1.59	1.59	1.59	1.77	1.87	2.19	2.57	2.87	4.13	4.39	5.35
D	5.29	5.29	5.29	5.47	6.12	6.44	7.29	8.38	11.02	11.28	12.24
E	2.79	2.79	2.79	2.79	3.19	3.19	3.70	4.24	5.42	5.42	5.42
F	6.24	6.24	6.24	6.24	7.48	7.48	8.15	10.20	13.39	13.39	13.39
G	3.70	3.70	3.70	3.70	4.25	4.25	4.72	5.51	6.89	6.89	6.89
Sized for Max. △ PSI	500 psi	500 psi	500 psi	500 psi	500 psi	300 psi	300 psi	300 psi	300 psi	300 psi	300 psi
Actuator	HP052SR10F	HP052SR10F	HP052SR10F	HP052SR10F	HP063SR10F	HP063SR10F	HP075SR10F	HP092SR10F	HP125SR10F	HP125SR10F	HP125SR10F
Ambient Temp	-4° / 176°F	-4° / 176°F	-4° / 176°F	-4° / 176°F	-4° / 176°F	-4° / 176°F	-4° / 176°F	-4° / 176°F	-4° / 176°F	-4° / 176°F	-4° / 176°F
Media Temp	-4° / 235°F	-4° / 235°F	-4° / 235°F	-4° / 235°F	-4° / 235°F	-4° / 235°F	-4° / 235°F	-4° / 235°F	-4° / 235°F	-4° / 235°F	-4° / 235°F
Wt. lbs	3.50	3.50	3.50	4.00	6.60	7.70	13.20	21.10	45.80	52.60	76.20

FOR APPLICATIONS EXCEEDING LISTED TEMPERATURES, CALL TO DISCUSS OPTIONS

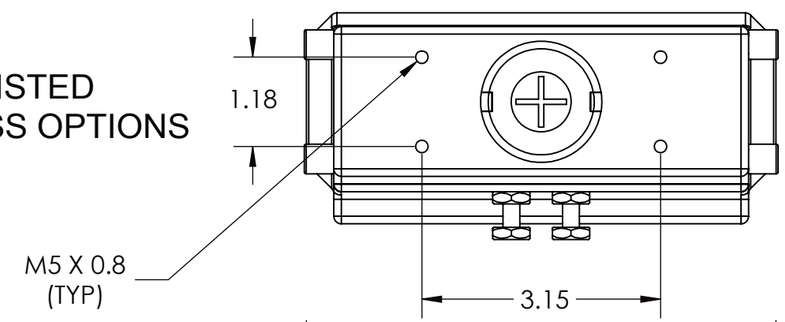

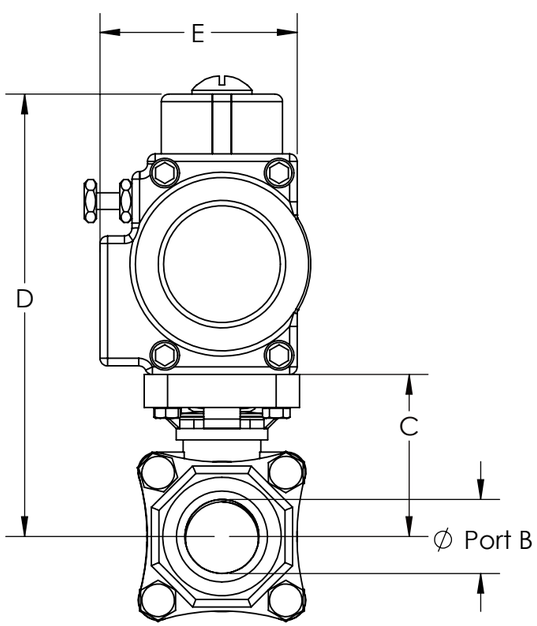

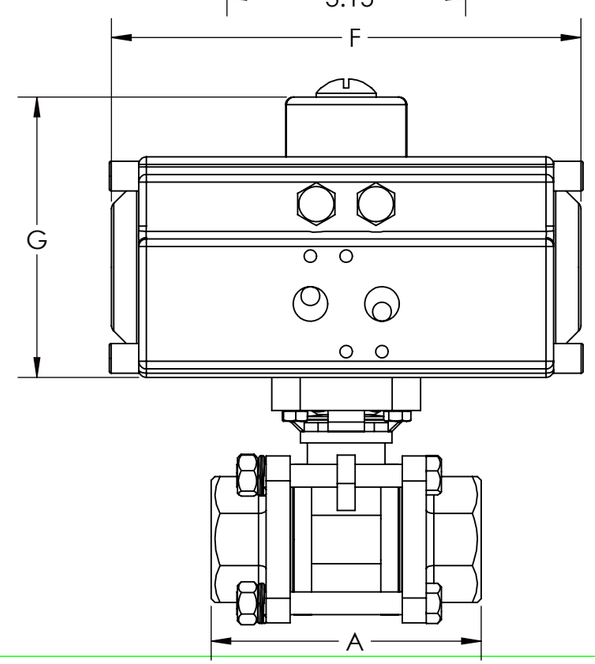

Valve Data

Body/End Cap	ASTM A351 GR. CF8M (316 SS)
Stem	316 Stainless Steel
Ball	316 Stainless Steel
Seats	RTFE
Thrustwasher	PTFE
Stem Seal	PTFE / VITON O-Ring

UNCONTROLLED DRAWING

THIS PRINT IS THE PROPERTY OF DYNAQUIP CONTROLS AND SHALL NOT BE COPIED, REPRODUCED,LOANED, OR DISPOSED OF DIRECTLY OR INDIRECTLY, NOR USED FOR ANY PURPOSE OTHER THAN THAT FOR WHICH IT IS SPECIFICALLY FURNISHED EXCEPT BY WRITTEN PERMISSION OF DYNAQUIP CONTROLS.

NO. P3 Series

FILE NO. Sub305

TITLE

Ball Valve SS
Full Port - NPT
HP-SR NO Actuator

DR	DATE	CH'KD	DATE	ENGR	DATE
CMM	12-07-22	P T S	06-22-16	P T S	06-22-16

DynaQuip Controls