DOUBLE ACTING	SPRING RETURN	A	B	C	D	E	F	G	H	J	K	L	M	N	P	WT. LBS.
UP010DA	N/A	4.72	2.38	2.36	.79	.39	.43	.55	3.15	-	1.18	M6x11	1.969	M5x10	1.417	1.54
UP020DA	UP020SR( )	5.79	2.81	2.83	.79	.39	.43	.55	3.15	-	1.18	M6x11	1.969	M5x10	1.417	3.30
UP034DA	UP034SR( )	6.50	3.27	3.46	.79	.39	.55	.61	3.15	*-	1.18	M8x15	2.756	M6x12	1.969	4.63
UP048DA	UP048SR( )	7.17	3.74	3.92	.79	.39	.55	.61	3.15	-	1.18	M8x13	2.756	M6x11	1.969	6.39
UP075DA	UP075SR( )	8.19	4.06	4.29	.79	.39	.67	.75	3.15	-	1.18	M8x15	2.756	M6x12	1.969	7.93
UP105DA	UP105SR( )	10.31	4.27	4.59	.79	.55	.67	.75	3.15	-	1.18	M8x13	2.756	M6x12	1.969	11.46
UP157DA	UP157SR( )	10.63	4.90	5.24	.79	.55	.87	1.10	3.15	-	1.18	M10x18	4.016	M8x14	2.756	15.21
UP237DA	UP237SR( )	11.85	5.59	6.10	.79	.87	.87	1.10	3.15	5.12	1.18	M10x18	4.016	M8x14	2.756	22.27
UP406DA	UP406SR( )	15.55	6.00	6.77	.79	.87	1.06	1.30	3.15	5.12	1.18	M12x22	4.921	M10x18	4.016	33.07
UP633DA	UP633SR( )	17.87	6.85	7.76	.79	.87	1.06	1.30	3.15	5.12	1.18	M12x22	4.921	M10x18	4.016	52.92
UP1009DA	UP1009SR( )	20.79	8.11	9.06	1.18	1.26	1.42	1.69	-	5.12	1.18	M16x23	5.512	-	-	77.17
UP1260DA	UP1260SR( )	20.91	8.90	10.04	1.18	1.26	1.42	1.69	-	5.12	1.18	M16x25	5.512	-	-	121
UP1831DA	UP1831SR( )	23.54	10.24	11.38	1.18	1.26	1.81	2.09	-	5.12	1.18	M20x28	6.496	-	-	176

"DA" TORQUE RATINGS LBS.-IN.

ACTUATOR SIZE	AIR P.S.I.G. 60	AIR P.S.I.G. 80
UP010DA	87	117
UP020DA	146	195
UP034DA	257	342
UP048DA	364	486
UP075DA	558	745
UP105DA	820	1093
UP157DA	1193	1591
UP237DA	1860	2480
UP406DA	3178	4238
UP633DA	4841	6455
UP1009DA	7808	10410
UP1260DA	9536	12715
UP1831DA	14012	18682

"SR" TORQUE RATINGS -- LBS.-IN.

Actuator Size	No. Of Spg	AIR SUPPLY P.S.I.G. 60 Start	60 End	80 Start	80 End	Spring Stroke Start	Spring Stroke End
UP020SR( )	9 10	81 --	51 --	130 122	100 90	95 105	65 73
UP034SR( )	9 10	142 --	91 --	227 215	176 157	166 185	115 127
UP048SR( )	9 10	201 --	128 --	323 305	250 224	236 262	163 181
UP075SR( )	9 10	309 --	197 --	496 468	384 343	361 402	249 277
UP105SR( )	9 10	453 --	287 --	726 685	560 501	533 592	367 408
UP157SR( )	9 10	662 --	422 --	1060 1001	820 734	771 857	531 590
UP237SR( )	9 10	1032 940	658 524	1652 1560	1278 1144	1202 1336	828 920
UP406SR( )	9 10	1761 --	1122 --	2821 2663	2182 1953	2056 2285	1417 1575
UP633SR( )	9 10	2681 --	1707 --	4295 4056	3321 2973	3134 3482	2160 2399
UP1009SR( )	9 10	4328 --	2758 --	6930 6543	5360 4799	5050 5611	3480 3867
UP1260SR( )	9 10	5285 --	3367 --	8464 7991	6546 5860	6169 6855	4251 4724
UP1831SR( )	9 10	7765 --	4947 --	12435 11741	9617 8610	9065 10072	6247 6941

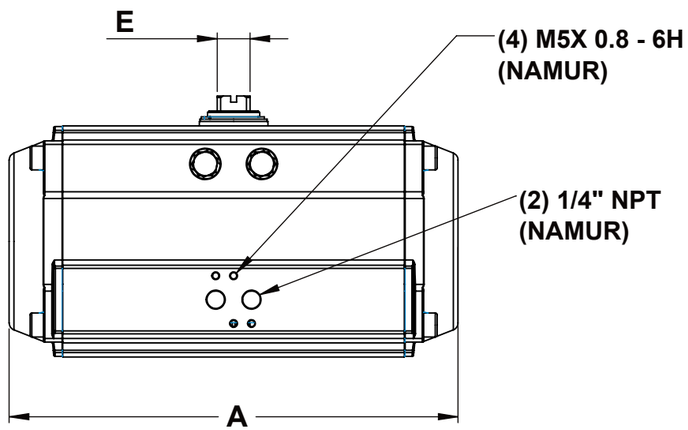

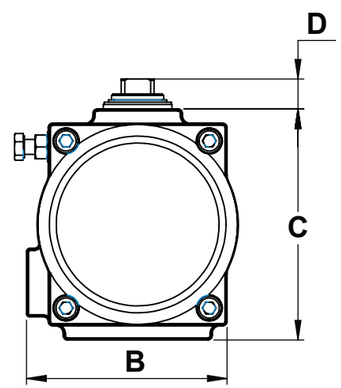

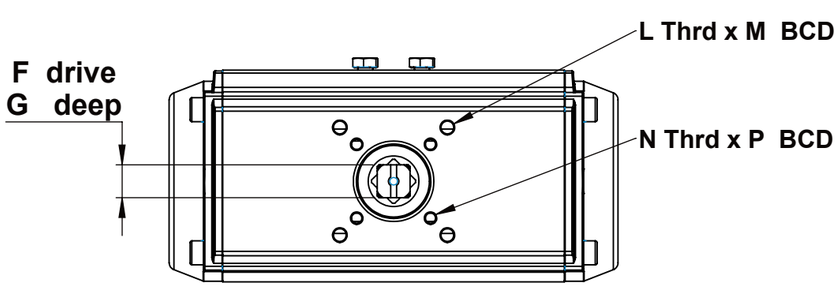

ISO 5211
BOTTOM MOUNT

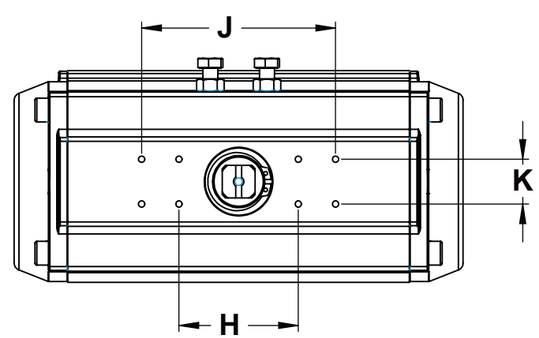

TOP

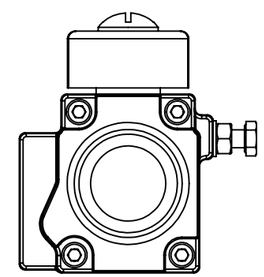

UP010DA CONFIGURATION

NOTE: STOP ADJUSTING SCREWS ARE ON OPPOSITE SIDE OF BODY

MATERIAL SPECIFICATIONS
Body.....Aluminum, Hard Anodized
Pistons.....Aluminum, Anodized
End Caps.....Aluminum, Powder Polyester Paint
Pinion.....Steel Alloy, Nickel Plated
O-Rings.....Buna
Bearings.....Delrin
Srews & Nuts...Stainless Steel
Springs.....Spring Steel, Electrophoretic Paint

PRESSURE & TEMPERATURE RATINGS
Minimum Supply Pressure 60 PSI
Maximum Supply Pressure 120 PSI
Operating Temperatures -4°F to 176°F
HIGH TEMPERATURE OPTION 5°F to 302°F
FKM O-RINGS
LOW TEMPERATURE OPTION -40°F to 176°F
LTNBR O-RINGS

UNCONTROLLED DRAWING
THIS PRINT IS THE PROPERTY OF DYNAQUIP CONTROLS AND SHALL NOT BE COPIED, REPRODUCED,LOANED, OR DISPOSED OF DIRECTLY OR INDIRECTLY, NOR USED FOR ANY PURPOSE OTHER THAN THAT FOR WHICH IT IS SPECIFICALLY FURNISHED EXCEPT BY WRITTEN PERMISSION OF DYNAQUIP CONTROLS.

NO. UP - ACTUATOR
FILE NO. SUB522

TITLE
PNEUMATIC ACTUATOR UP SERIES

DR	DATE	CH'KD	DATE	ENGR	DATE
MJP	11-19-25				

DynaQuip®
CONTROLS CORPORATION